Espay Solar Energy S.L.

How to identify the grade of LONGi photovoltaic panels

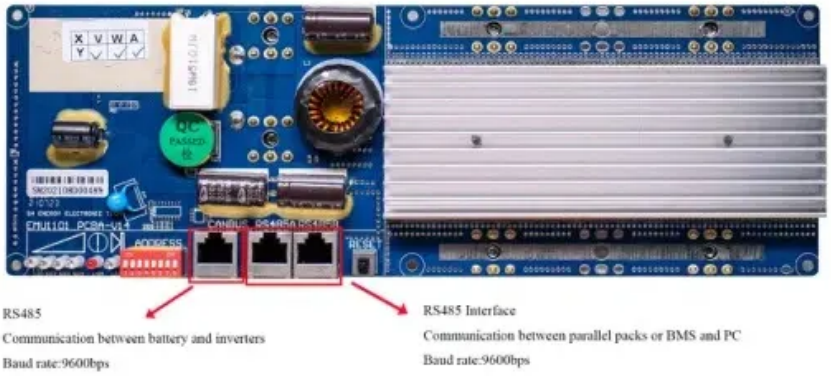

Overview

In this video, we'll show you *how to test and verify Longi Himo-5 & Himo-6 solar panels* using the latest *barcode and QR code scanning system**. The product barcode is a string of numbers on the front or back of the module as shown in the figure. How to Check Longi A-Grade Solar Panel | A-Grade Solar Panel Testing | Mr Engineer ☀ *Want to verify if your Longi solar panel is A-grade?

* In this video, we'll show you *h. The differences between A and B class panels extend beyond surface appearances, impacting everything from energy output to financial return Ever wondered why. But wait, before you dive headfirst into the world of solar panels, let's shed some light on a crucial aspect: ensuring the authenticity of those shiny Longi Solar Panels. After all, you don't want to end up with a lemon when you were aiming for a Ferrari, right?

The Solar Superstars Longi Solar. renewable and environmentally beneficial power source. Longi Sola is known for its cutting-edge solar panel te hnology. Made from single-crystal silicon, these panels are among the most efficient and widely used in residential and commercial.

How to identify the grade of LONGi photovoltaic panels

How to identify the grade of LONGi photovoltaic panels

A solar panel"s temperature coefficient shows the relationship between PV output and the temperature of the solar panel, and is represented as the overall percentage decrease in

An In-Depth Guide to Longi Solar Panel: Standards, Grades, and ...

Explore everything about longi solar panel standards, grades, and performance. Learn key specifications, efficiency metrics, durability, and real-world applications to make informed solar ...

LONGi Solar Panels

LONGi, founded in 2000, is a solar panel manufacturer based in San Ramon. On this page, you can find a complete list of solar panels from LONGi and compare models side-by-side.

How to verify longi A Grade Solar

Panel

How to verify longi A Grade Solar Panel , How to check longi solar panel serial number , How To Check Longi A Grade Solar Panel , A Grade Solar Panel Testing ,There are

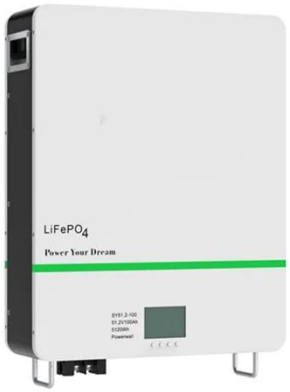

PV Module Authenticity

To query the authenticity of LONGi PV module, please enter the product barcode, which is a string of numbers on the front or back of the module.

How to Check Authenticity of Longi Solar Panels: A Comprehensive ...

Ensuring the authenticity of your Longi solar panels is like adding an extra layer of sunscreen - it protects you from getting burned. So, before you embark on your solar-powered adventure, take the ...

LONGi-PVmodule

The digital string code is behind the component board, as shown in the figure.

How To Check Longi A Grade Solar Panel , A Grade ...

In this video, we'll show you *how to test and verify Longi Himo-5 & Himo-6 solar panels* using the latest *barcode and QR code scanning system**.

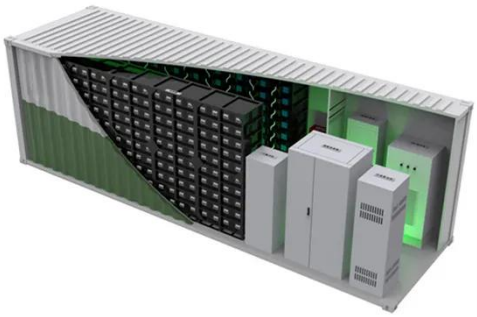

How to identify the authenticity of LONGi photovoltaic panels

The vast majority of solar panel manufacturers use boron-doped P-type silicon wafers, which results in a performance warranty of around 82 to 83% retained power after 25

Understanding LONGi Solar Panel Grades: A vs B Classifications

Let's dissect LONGi's photovoltaic grading system through the lens of a solar installer who once confused B-grade panels with abstract art. The

differences between A and B class panels extend ...

Contact Us

For catalog requests, pricing, or partnerships, please visit: https://espay.es